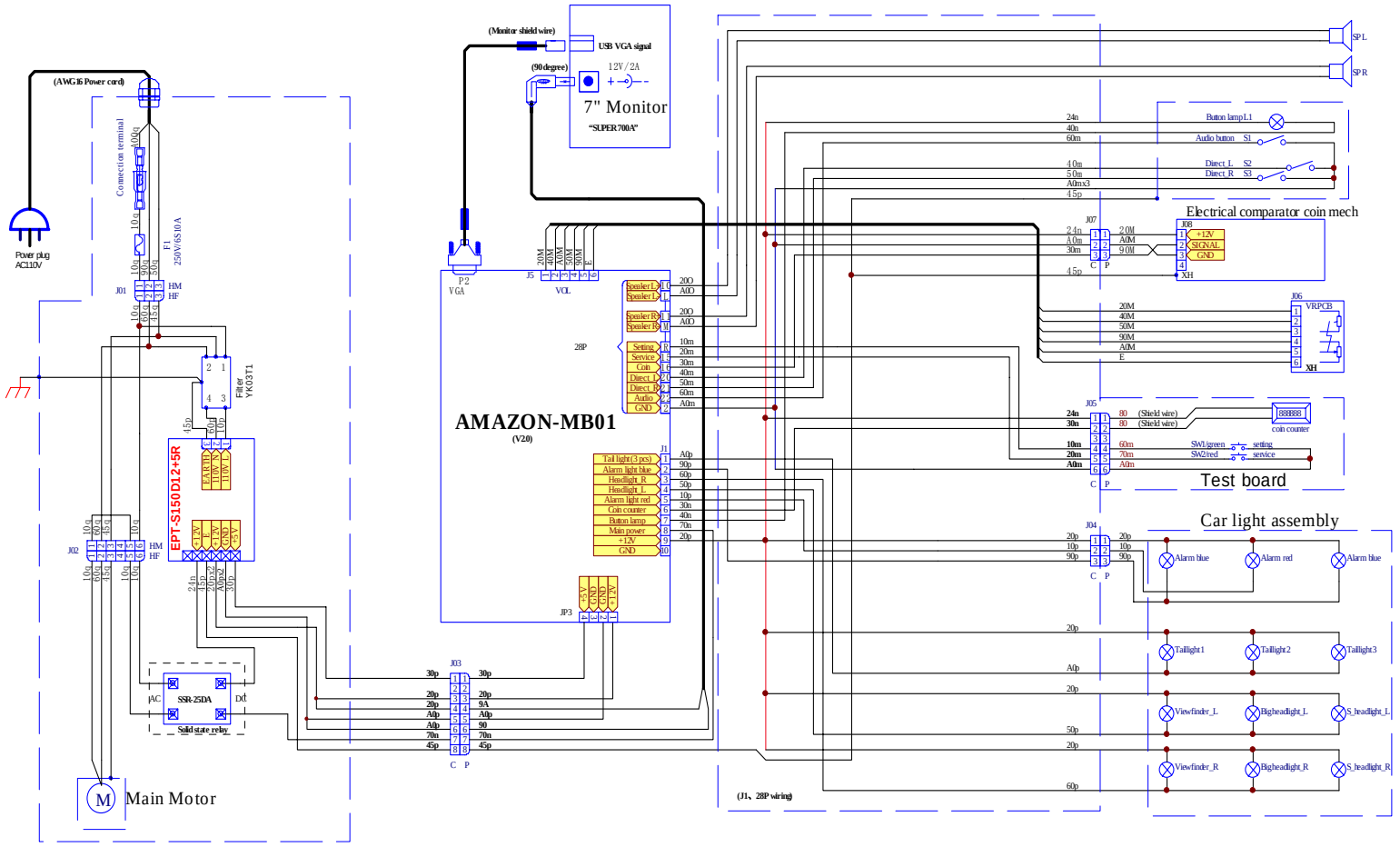

Notice: The color and the type of the wire express as follow for example: 2 0 M
Wire color : 20 is single red
Wire type: M is AWG24 UL1007

9	White	I		R	AWG14 UL1005	Unit:	mm
8	Gray	H		Q	AWG16 UL1005	Prop.	:
7	Violet	G		P	AWG18 UL1007		
6	Blue	F		O	AWG20 UL1007		
5	Green	E	Shielding layer	N	AWG22 UL1007	4001~5000	±50
4	Yellow	D	Light Blue	M	AWG24 UL1007	3001~4000	±40
3	Orange	C	Light Green	L	AWG26 UL1007	2001~3000	±30
2	Red	B	Pink	K	AWG28 UL1007	1001~2000	±20
1	Brown	A	Black	J	AWG30 UL1007	0~1000	±10
Wire Color				Wire Type		Tolerance	

Design		Technics	
Drawing		Standard	
Collate			
Check		Approve	

UNIS

Name: Mini Police Ride Wiring Diagram
Chart: A3
Drawing NO: MNJCC-PX-000
Version: V1.0
Date: 15-Dec-2008
Page: 1
Path: E:\MiniPoliceRide\未修改的不同文件\线路\ddb-minipo